COMPACT TRACKED LIFTS | IMER R 19-56



AVAILABLE IN LITHIUM & HONDA GAS ENGINE

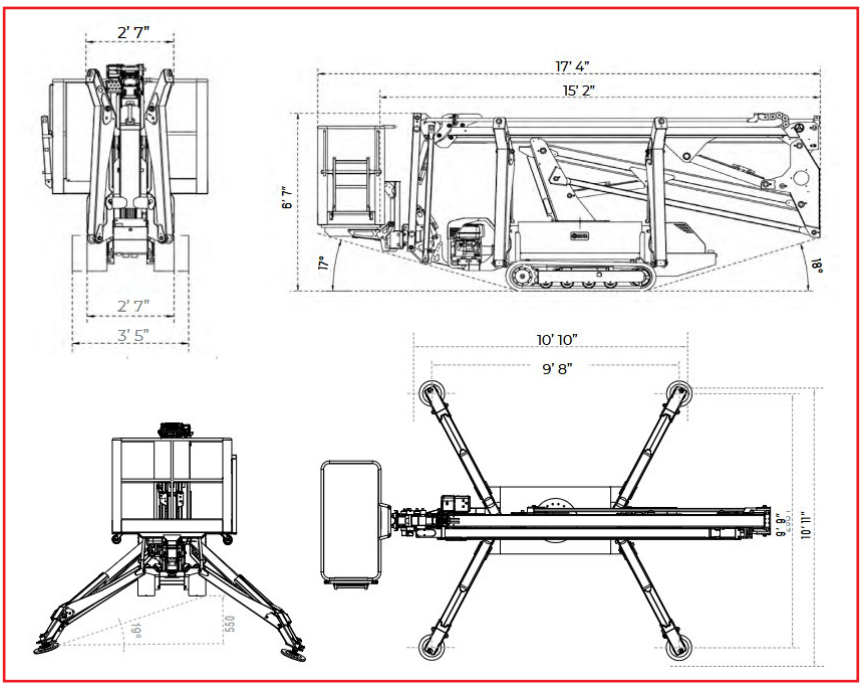



ULTRA NARROW DESIGN - UNDER 32IN WIDE

•Wellbuilt• Equipment

708-279-7574 • www.WellbuiltEquipment.com

COMPACT TRACKED LIFTS | IMER R 19-56

SPEC	IMER R 19
MAX PLATFORM HEIGHT	56 ft
MAX SIDE REACH (310LBS)	28 ft
MAX SIDE REACH (510LBS)	23 ft
STOWED HEIGHT	6 ft 7 in
STOWED LENGTH	15 ft 2 in
STOWED WIDTH	2 ft 7 in
MAX TRAVEL SPEED	1.25 MPH
OUTRIGGER SETUP LENGTH	10 ft 10 in
OUTRIGGER SETUP WIDTH	10 ft 11 in
GROUND CLEARANCE	18 DEGREES
GRADEABILITY	32%
MACHINE WEIGHT	5,445 lbs
MAX CAPACITY	510 lbs



FULL SET OF LOWER CONTROLS



WIRELESS REMOTE STANDARD



UP TO 72 MONTH FINANCING AVAILABLE!!

/AERIALLIFTREPAIRS

@AERIALLIFTREPAIRS

Wellbuilt Equipment

FAMILY OWNED & OPERATED SINCE 1987

708-279-7574 • www.WellbuiltEquipment.com