Genie® S®-40 XC™ & S-45 XC, S-40 TraX™ & S-45 TraX

Specifications

Models	S-40 XC & S-40 TraX		S-45 XC & S-45 TraX	
Measurements	**US**	**Metric**	**US**	**Metric**
Working height max.(1)	45 ft 6 in	14,04 m	50 ft 6 in	15,56 m
Working height max.(TraX)(1)	45 ft 8 in	14,09 m	50 ft 8 in	15,61 m
Platform height max.	39 ft 6 in	12,04 m	44 ft 6 in	13,56 m
Platform height max.(TraX)	39 ft 8 in	12,09 m	44 ft 8 in	13,61 m
Horizontal reach max.	31 ft 1 in	9,47 m	36 ft 2 in	11,02 m
Below ground reach	1 ft	0,30 m	4 ft 2 in	1,27 m
A Platform length (8 ft/6 ft)	3 ft/2 ft 6 in	0,91 m/0,76 m	3 ft/2 ft 6 in	0,91 m/0,76 m
B Platform width (8 ft/6 ft)	8 ft/6 ft	2,44 m/1,83 m	8 ft/6 ft	2,44 m/1,83 m
C Height - stowed (tires)	8 ft 3 in	2,51 m	8 ft 3 in	2,51 m
C Height - stowed (TraX)	8 ft 6 in	2,59 m	8 ft 6 in	2,59 m
D Length - stowed (tires)	26 ft 4 in	8,03 m	31 ft 1 in	9,47 m
D Length - stowed (TraX)	26 ft 4 in	8,03 m	31 ft 1 in	9,47 m
E Width (tires)	8 ft 2 in	2,49 m	8 ft 2 in	2,49 m
E Width (TraX)	8 ft 1,6 in	2,48 m	8 ft 1,6 in	2,48 m
F Wheelbase	8 ft 1 in	2,46 m	8 ft 1 in	2,46 m
G Ground clearance - center (tires)	1 ft .5 in	0,32 m	1 ft .5 in	0,32 m
G Ground clearance - center (TraX)	1 ft 7 in	0,48 m	1 ft 7 in	0,48 m
H Height under counterweight	3 ft 4 in	1,02 m	3 ft 4 in	1,02 m

Productivity

Lift capacity max. - unrestricted	660 lb	300 kg	660 lb	300 kg
Lift capacity max. - restricted	1 000 lb	454 kg	1 000 lb	454 kg
Number of Platform Occupants (restricted/unrestricted)	3/2		3/2	
Platform rotation	160°		160°	
Jib length	—		5 ft	1,52 m
Vertical jib rotation (up/down)	—		133°	
Turntable rotation	360°		360°	
Turntable tailswing	38 in	0,97 m	38 in	0,97 m
Drive speed - stowed (tires)	4,0 mph	6,40 km/h	4,0 mph	6,40 km/h
Drive speed - stowed (TraX)	2,04 mph	3,28 km/h	2,04 mph	3,28 km/h
Drive speed - raised (tires)	0,68 mph	1,1 km/h	0,68 mph	1,1 km/h
Drive speed - raised (TraX)	0,68 mph	1,1 km/h	0,68 mph	1,1 km/h
Gradeability - stowed(2)	45 %		45 %	
Tilt sensor activation (front to back/side to side)	7° / 5°		7° / 5°	
Turning radius - inside/outside (tires)	6 ft 10 in/ 17 ft 2 in	2,08 m/ 5,23 m	6 ft 10 in/ 17 ft 2 in	2,08 m/ 5,23 m
Turning radius - inside/outside (TraX)	6 ft 10 in/ 17 ft 2 in	2,08 m/ 5,23 m	6 ft 10 in/ 17 ft 2 in	2,08 m/ 5,23 m
Tires	315/55D20		315/55D20	
Track system - 4 points	TraX		TraX	

Power

Power	Diesel		Diesel	
Hydraulic tank capacity	38 gal	144 L	38 gal	144 L
Fuel tank capacity	35 gal	132 L	35 gal	132 L

Weight(3) and Floor Loading(4)

Weight (tires)	13 945 lb	6 325 kg	15 800 lb	7 167 kg
Weight (TraX)	17 120 lb	7 765 kg	19 010 lb	8 623 kg
Tire contact pressure	92 psi	634 kPa	92 psi	634 kPa
Track contact pressure	22 psi	151,7 kPa	25 psi	172,4 kPa
Occupied floor pressure (tires)	162 psf	7,76 kPa	187 psf	8,95 kPa
Occupied floor pressure (TraX)	201 psf	9,6 kPa	223 psf	10,7 kPa

Sound and Vibration Levels

Sound Pressure level (ground workstation)	90 dBA	90 dBA
Sound Pressure level (platform workstation)	77 dBA	77 dBA
Vibrations	< 2,5 m/s²	< 2,5 m/s²

(1) The metric equivalent of working height adds 2 m to platform height. The imperial equivalent adds 6 ft to platform height.
(2) Gradeability applies to driving on slopes and may vary depending on options and machine configurations. See operator's manual for details regarding slope ratings.
(3) Weight refers to standard configuration and may vary depending on options and/or country standards.
(4) Floor loading information is approximate and may vary depending on options and machine configurations. It should be used only with adequate safety factors.

Range of motion S-40 XC/S-40 TraX

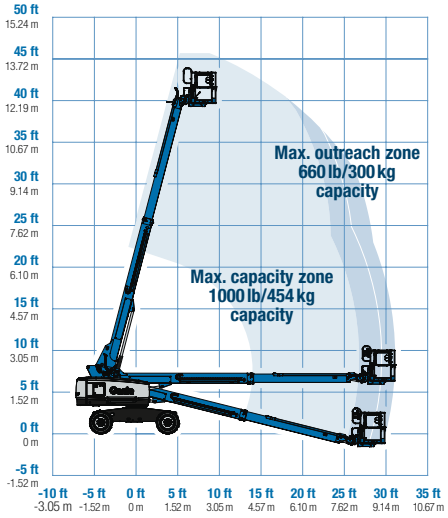

Range of motion S-45 XC/S-45 TraX

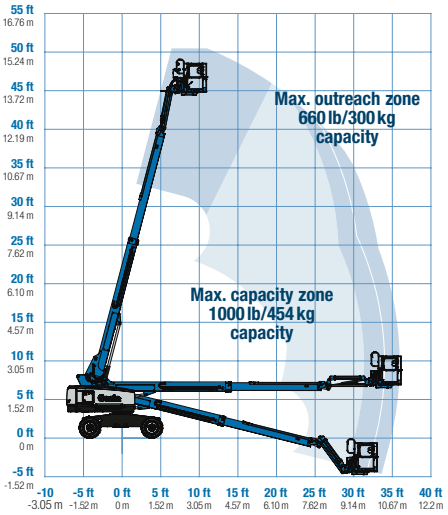

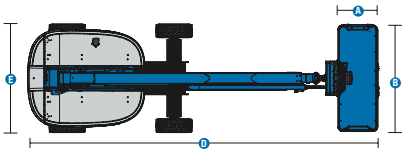

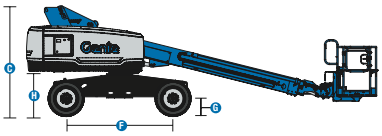

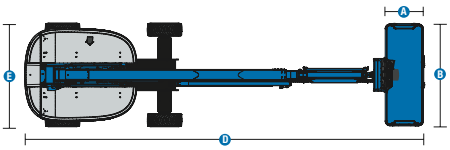

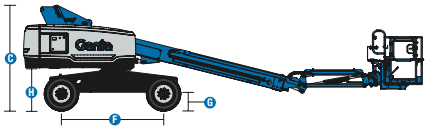

Genie® S®-40 XC™ & S-45 XC, S-40 TraX™ & S-45 TraX

SKU: Standard Model

- **S40XC001AF0017:** S-40 XC, 4WD
- **S40XC001AF0022:** S-40 XC, Lift Power 3kW, 4WD
- **S40XC001AF0023:** S-40 XC, Lift Power 12kW Welder Ready, 4WD

SKU: Standard Model

- **S45XC001AF0051:** S-45 XC, 4WD
- **S45XC001AF0052:** S-45 XC, Lift Power 3kW, 4WD
- **S45XC001AF0099:** S-45 XC, Lift Power 12kW Welder Ready, 4WD

* Build to Order

	Option availability	S	S+	BtO
Power	49 hp, 37 kW, Deutz D2.9L, Diesel, T4f	✔	✔	✔
	49 hp, 37 kW, Perkins 404F-E22T, Turbo Diesel, T4f			❍
	60 hp, 45 kW, Ford 2.5L, Gas/LPG			❍
	Cold weather package			❍
	Positive air shutdown system			❍
	Anti-restart engine protection	✔	✔	✔
	Auto engine fault shutdown	✔	✔	✔
	In cylinder glow plug (diesel only)	✔	✔	✔
Platform	6ft/1,83m dual-entry platform with side swing gate			❍
	8ft/2,44m tri-entry platform with side swing gate	✔	✔	✔
	Dual axis joystick steering	✔	✔	✔
	Thumb rocker steering			❍
	Air line to platform			❍
	Control box covers		❍	❍
	Lift Guard Full Mesh panels			❍
	Lift Guard Half Mesh panels			❍
	Light Package: drive and work lights		❍	❍
	Platform auxiliary top rail			❍
	Lift Power 3kW AC Generator, 110V/60Hz			❍
	Lift Power 3kW AC Generator, 220V/50Hz			❍
	Lift Power 12kW Welder Ready			❍
	660lb/300kg & 1000lb/454kg dual load capacity with automatic envelope control	✔	✔	✔
	Drive enable system	✔	✔	✔
	Horn	✔	✔	✔
	Lift Guard Contact Alarm	✔	✔	✔
	Lift Tools Work Tray	✔	✔	✔
	Platform load sense system	✔	✔	✔
	Proportional controls	✔	✔	✔
	Self-leveling platform	✔	✔	✔
Chassis	Lift Connect Telematics	✔	✔	✔
	Telematics-ready	✔	✔	✔
	Lift Connect with Access Manager upgrade		❍	❍
	Biodegradable hydraulic oil			❍
	Cold weather hydraulic oil			❍
	Fire resistant hydraulic oil			❍
	High floatation, air-filled tires		❍	❍
	Rough terrain, foam-filled tires	✔	✔	✔
	Rough terrain, foam-filled, non-marking tires		❍	❍
	TraX track drive system			❍
	Deluxe hostile environment kit			❍
	Hostile environment kit			❍
	LPG tank 33.5 lb			❍
	Tow package			❍
	2 speed wheel motors	✔	✔	✔
	Active oscillating axle	✔	✔	✔
	Alarm package: includes flashing beacon and travel alarm	✔	✔	✔
	Chassis tilt lift and drive function cut-out	✔	✔	✔
	Descent, tilt and motion alarm	✔	✔	✔
	Dual battery system	✔	✔	✔
	Hour meter	✔	✔	✔
	Hydraulic oil cooler	✔	✔	✔
	Tech Pro Link connector	✔	✔	✔

Positive air shutdown system for Deutz engines only

- S — Standard
- S+ — Standard +
- BtO — Build to Order
- ✔ — Standard Features
- ❍ — Options

Rugged Terrainability **Xtra Capacity** **Zero-Load Calibration**

Genie Genuine Accessories[1]

- Lift Tools Productivity Tools
- Lift Connect Telematics
- Tech Pro Link Handheld Device

(1) More accessories available from Genie Genuine Parts.

Product specifications are subject to change without notice or obligation. Photographs and/or drawings herein are for illustrative purposes only. Refer to the appropriate Operator's Manual for instructions on proper equipment use. Failure to follow instructions in the Operator's Manual may result in serious injury or death. The only warranty applicable to our equipment is the standard written warranty applicable to the particular product and sale and we make no other warranty, express or implied. Products and services listed may be trademarks, service marks or trade names of Terex Corporation and/or their subsidiaries in the USA and many other countries. Terex, Genie, Quality By Design, Xtra Capacity, Lift Power, Lift Guard, Lift Tools, Lift Connect and Tech Pro Link are registered trademarks of Terex Corporation or its subsidiaries.

02/24

© 2024 Terex Corporation